

202:
- first 2 is last digit of year 2022
- 02 means second week of 2022

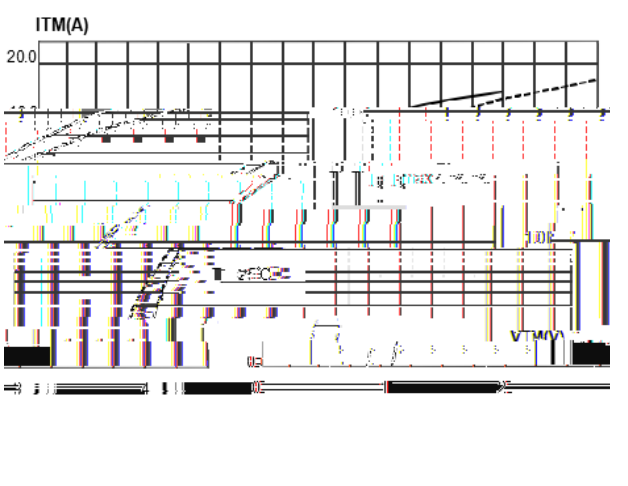

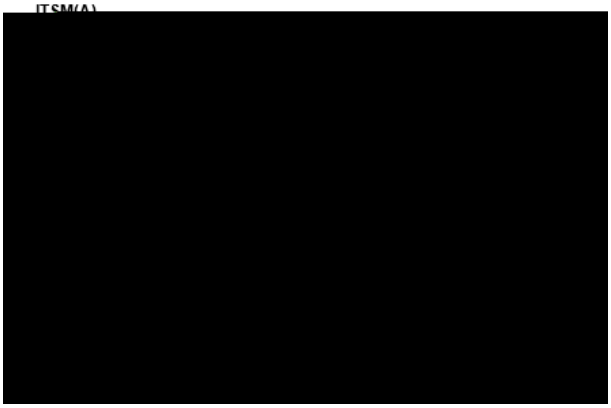

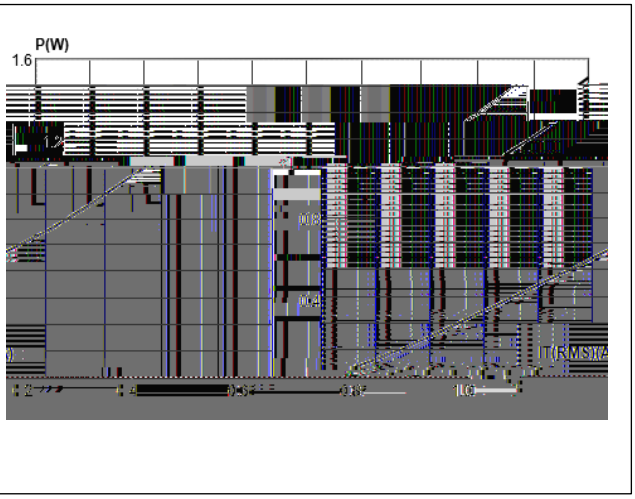



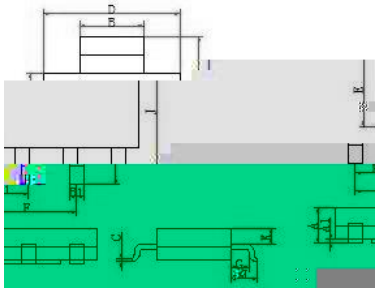

REF.	DIMENSIONS Millimeters Type	REF.	DIMENSIONS Millimeters Type
A	1.65±0.2	F	4.6±0.1
A1	0.06±0.04	F1	2.3
B			

SOT-223

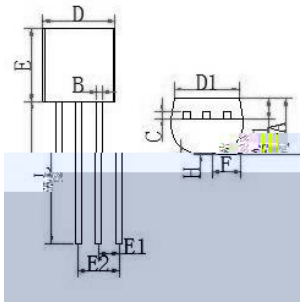

TO-92
